REV.	ECN.NO.	MODIFY.CONTENT

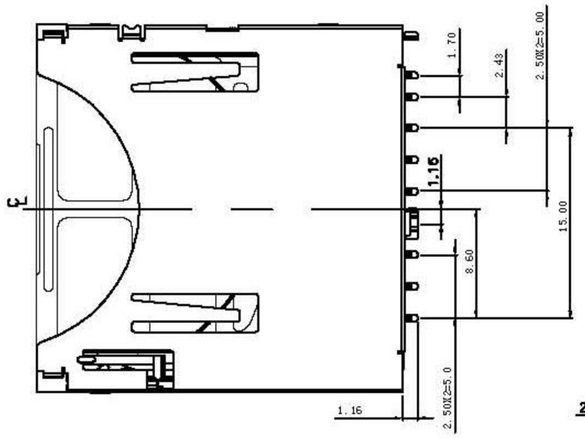

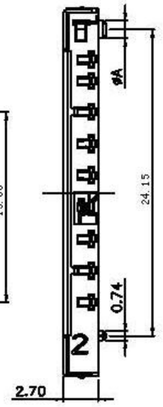

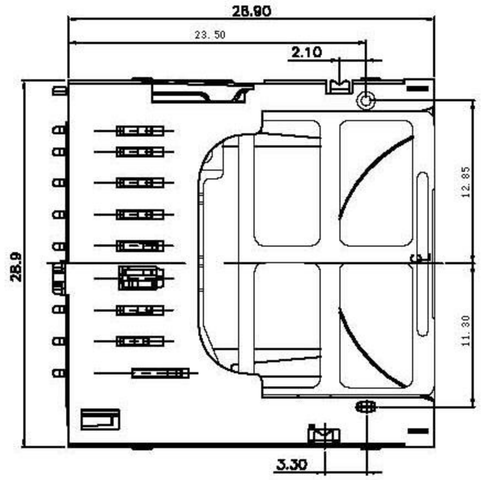

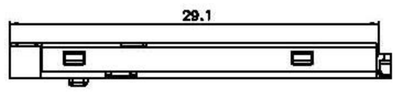

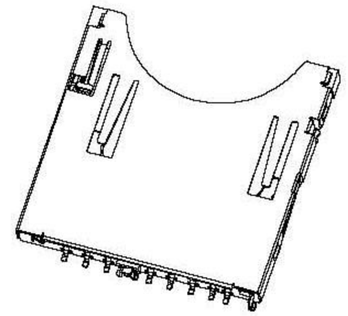

SPECIFICATION

1.Material:

Insulator: LCP, rated UL94V-0,color:black.
Contacts: Phosphor Bronze,
Tin 160u" at Solder Tail,
Selectived Gold on Contact Area Plating.
Ground:Phosphor Bronze,Tin 160u".
Shell: Stainless.

2.Electrical Characteristics:

Operating voltage : 250V(AC/DC).
Current rating : 0.5 A.
Operating Temperature: -20°C~+65°C.
Insulation resistance: 1000M ohms min. at 250VDC
Dielectric withstanding voltage:500 VAC/1minute.
Contact resistance: 100m ohms max.
Mating cycle: 10000 cycles, spring is not breaking.

Pin No.		SD	MMC
P1	MMC-DAT3 SD-CD/DAT3	1P	1P
P2	MMC-CMD SD-CMD	2P	2P
P3	MMC-VSS1 SD-VSS1	3P	3P
P4	MMC-VDD SD-VDD	4P	4P
P5	MMC-CLK SD-CLK	5P	5P
P6	MMC-VSS2 SD-VSS2	6P	6P
P7	MMC-DAT0 SD-DAT0	7P	7P
P8	SD-DAT1	8P	
P9	SD-DAT2	9P	

PART.NO. :

SD01/02-AP1**-**

44:功能区镀金5U",锡脚镀亮纯锡至少160U"
45:功能区镀金10U",锡脚镀亮纯锡至少160U"
01:胶芯为黑色

TITLE	PART. NO	ØA
SD Push Push conn.(A typle)	SD01-AP1**-**	POST Ø1.45
SD Push Push conn.(B typle)	SD02-AP1**-**	POST Ø1.35

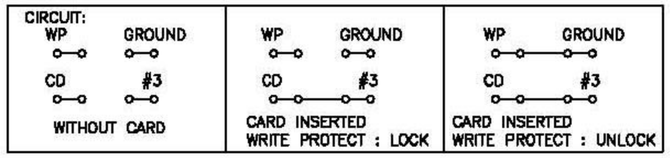

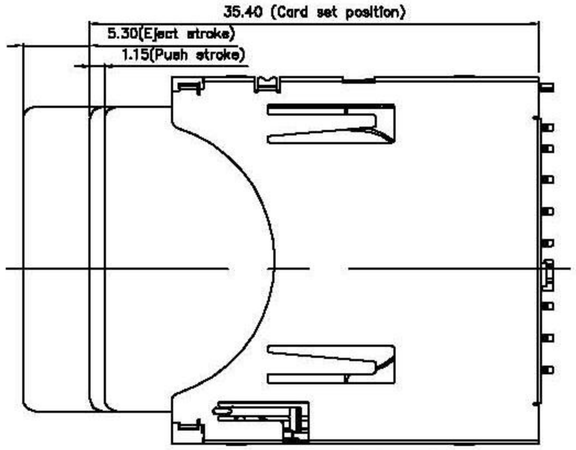

View of inserted card

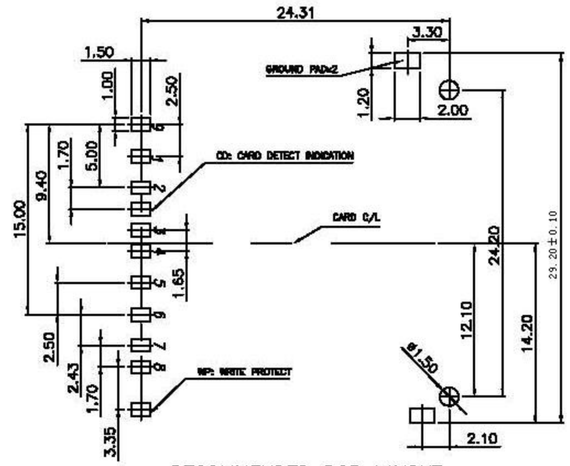

RECOMMENDED PCB LAYOUT
(ALL TOLERANCE ARE ±0.05)

GENERAL	TOLERANCE	DWG.NO.	SD01/02-AP100-00	PART.NO.	SD01/02-AP1**-**	DRAWN	lixiaoli 01/22'08	UNIT	mm	SCALE	NO SCALE
x.±0.50	x. °±5°	REV.	B	TITLE	SD Push Push conn.(A/B TYPE)	CHECKED					
.x±0.25	.x °±2°	SIZE									
.xx±0.15	.xx°±1°	A4		SHEET	1 OF 1	APPROVED					